AstroAI

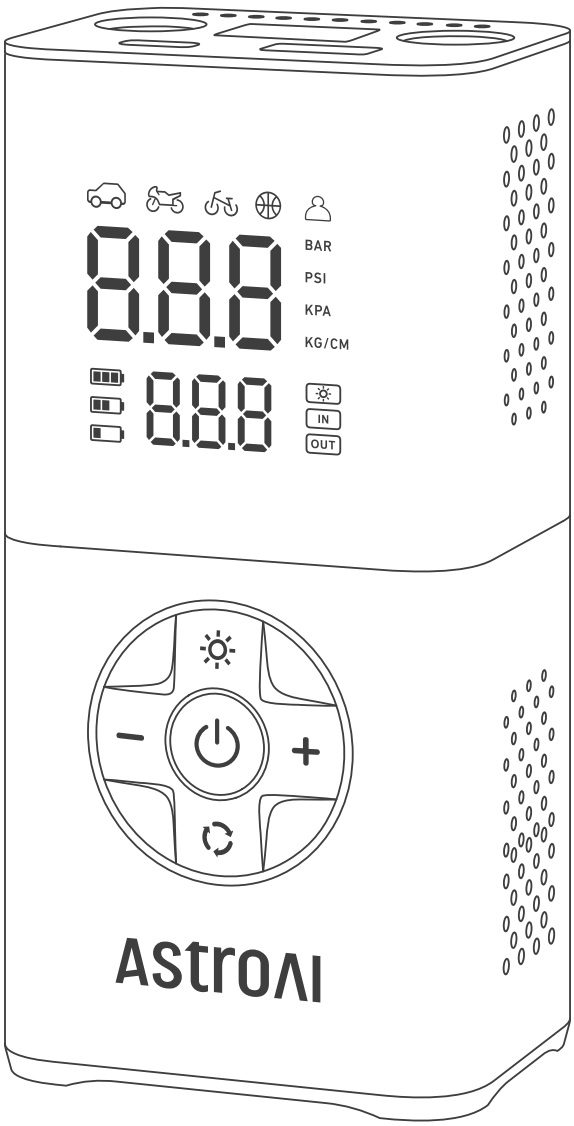

AIRUN L7

PORTABLE CAR AIR PUMP

USER MANUAL

CATALOG

INTRODUCTION ---------- 04

WARNING ---------- 05

PACKAGE INCLUDES ---------- 05

DIAGRAM ---------- 06

PREPARATION ---------- 07

INSTRUCTIONS ---------- 08

TROUBLESHOOTING/FAQ ---------- 13

MAINTENANCE ---------- 14

SPECIFICATIONS ---------- 14

RECYCLING ---------- 15

WARRANTY PERIOD ---------- 15

INTRODUCTION

Thank you for purchasing the AstroAI Portable Car Air Pump.

This product is lightweight, portable, easy to operate, and capable of inflating small car tires, motorcycle tires, bicycles, balls, and other inflatables. It also works as an emergency flashlight and power bank.

For optimum performance and safe operation, read and follow all of the instructions in this manual before operating this product.

Keep this manual for future reference. We hope you enjoy your new air pump!

Please fully read and understand this manual before using this product and keep this manual for future reference.

WARNING

- Carefully read the instructions before use.
- Check the preset pressure value before inflating. The preset pressure value should match the object to be inflated.
- Keep this product away from flammables and explosive chemicals or objects.
- Avoid storing this product in humid or dusty conditions.
- Avoid putting this product in a place where it can easily fall.
- Keep out of reach of children.
- Do not improperly dispose of this product or expose it to an open flame.
- High temperatures caused by prolonged continuous use may damage the product. Let the pump cool down for 10 minutes after 15 minutes of continuous use.
- Do not use chemical cleaners to clean the pump. Only use mild soap and a cloth dipped in hot water to clean the plastic parts.

PACKAGE INCLUDES

AstroAI Car Air Pump	× 1	Needle Valve Adapter	× 1
Quick Connector	× 1	User Manual	× 1
USB Charging Cord	× 1	Presta to Schrader Adapter	× 1
Air Nozzles	× 2		

DIAGRAM

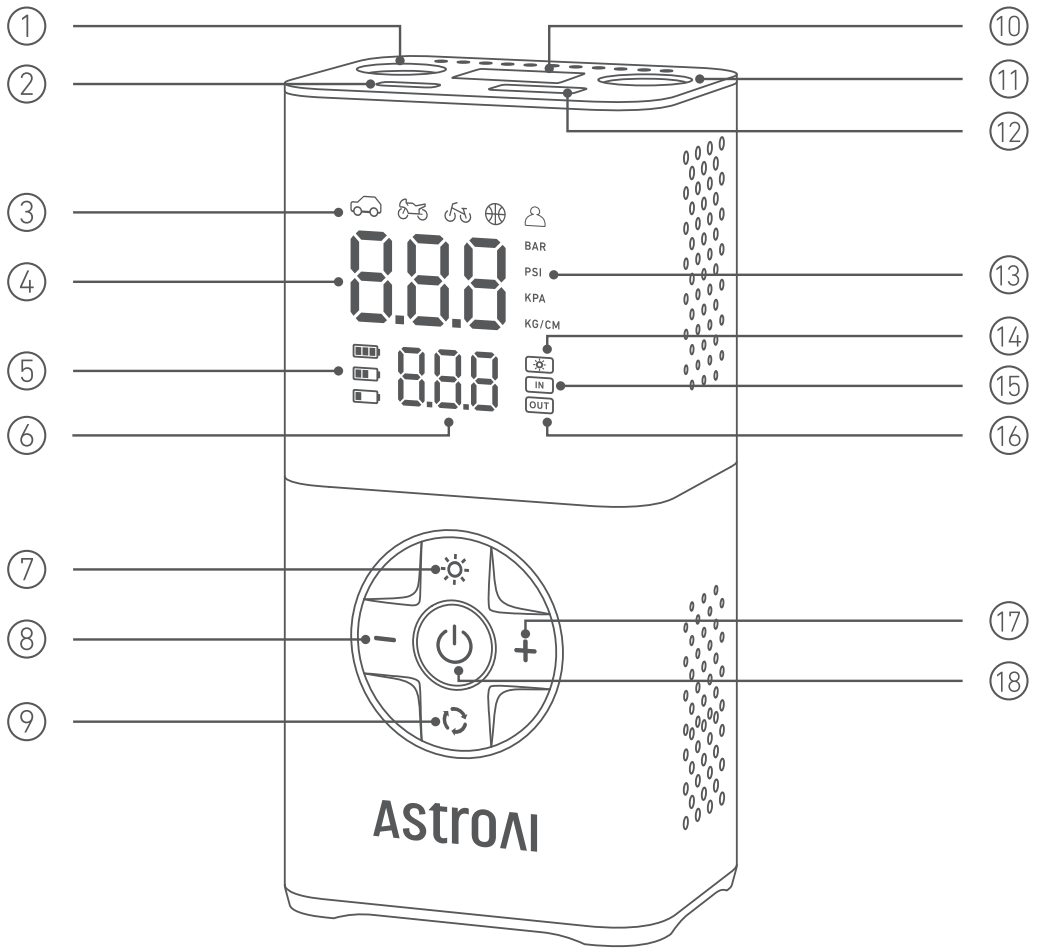

① Quick Connector Port
② Type-C Charging Port
③ Inflation Modes
④ Real-Time Pressure Display
⑤ Battery Level Display
⑥ Preset Pressure Value Display
⑦ LED Flashlight Button
⑧ "-" Button (Decrease Pressure)
⑨ Settings Button
⑩ LED Light
⑪ Hose Storage Port
⑫ USB Output Port
⑬ Pressure Units
⑭ Light Icon Display
⑮ Input Charging Icon Display
⑯ Output Charging Icon Display
⑰ "+" Button (Increase Pressure)
⑱ Power Button

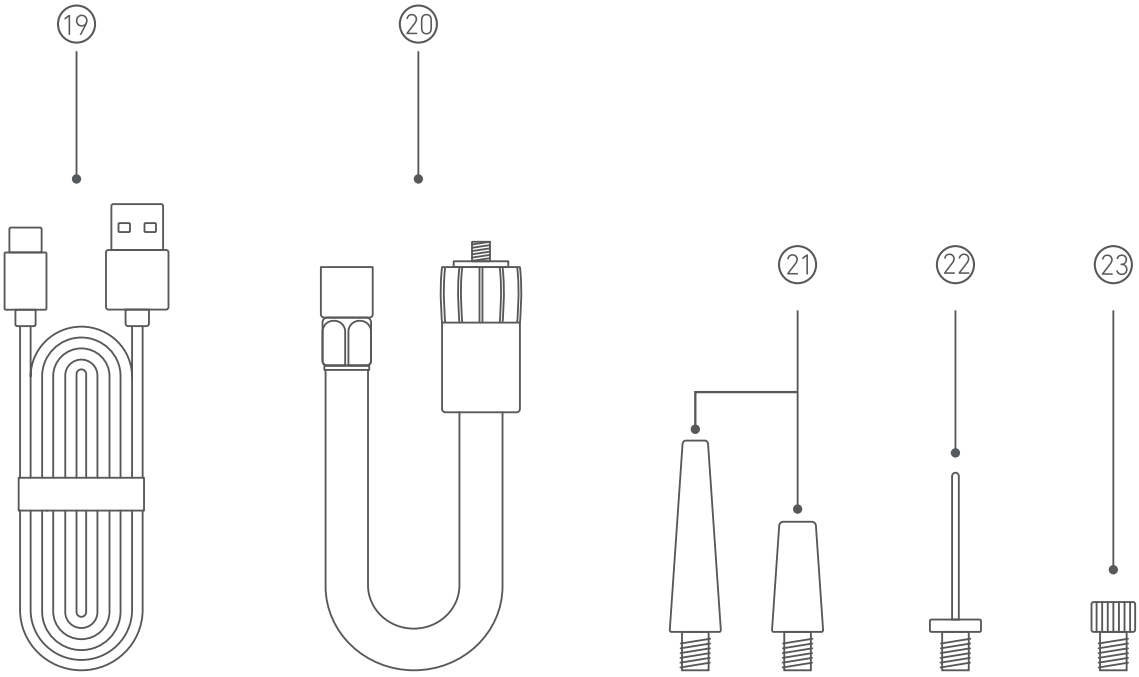

⑲ USB Charging Cord

⑳ Quick Connector

㉑ 2 x Air Nozzles

㉒ Needle Valve Adapter

㉓ Presta to Schrader Adapter

PREPARATION

Charging

- Before initial use, please charge the product with the included Type-C cord (outlet adapter not included).

- Battery level display:
  This icon has three statuses based on the device's battery level: one cell means the pump is < 30% charged, two cells mean 50% charged, and three cells mean the device is fully charged. The battery level icon will flash when the product is charging and stays on when it is fully charged.

INSTRUCTIONS

I. Turn On/Off

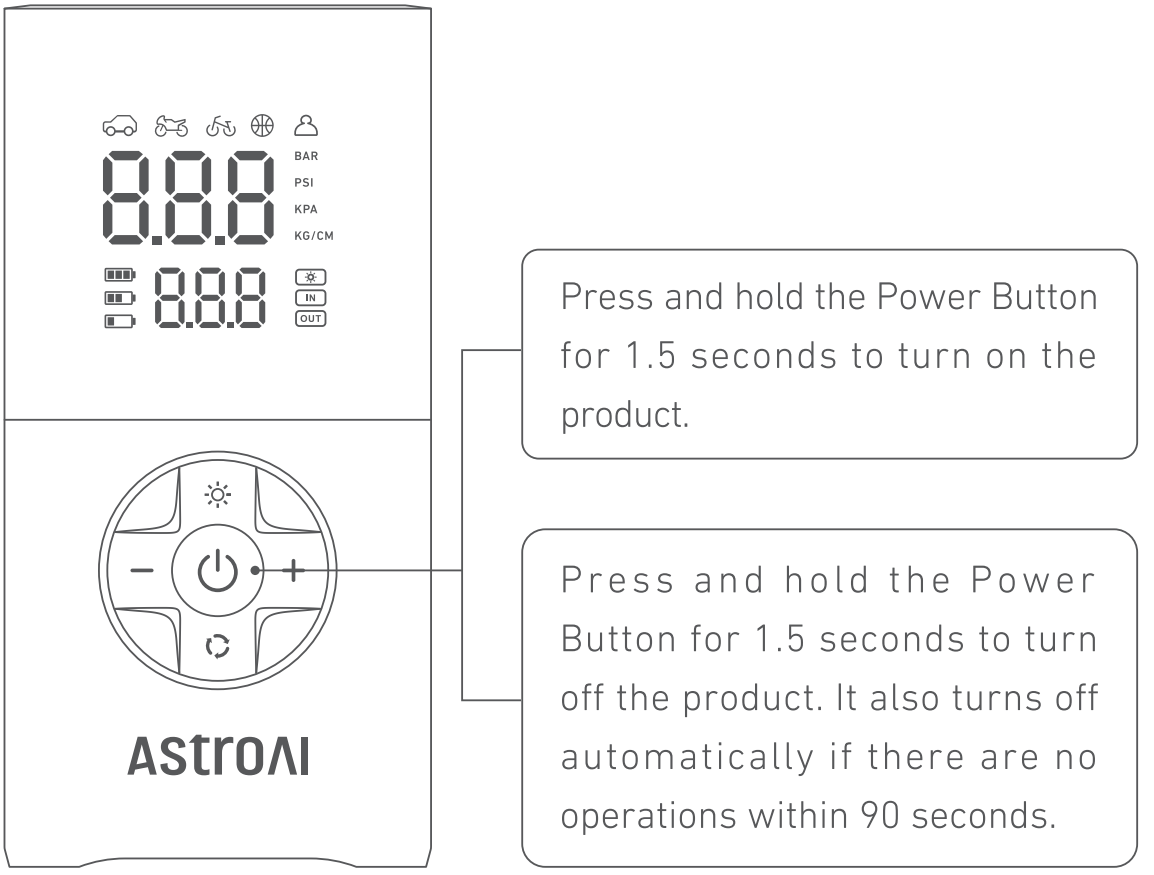

II. Switch Units/Modes

- Press the Settings Button to switch between the 5 inflation modes: cars, motorcycles, bicycles, basketballs, and custom mode.

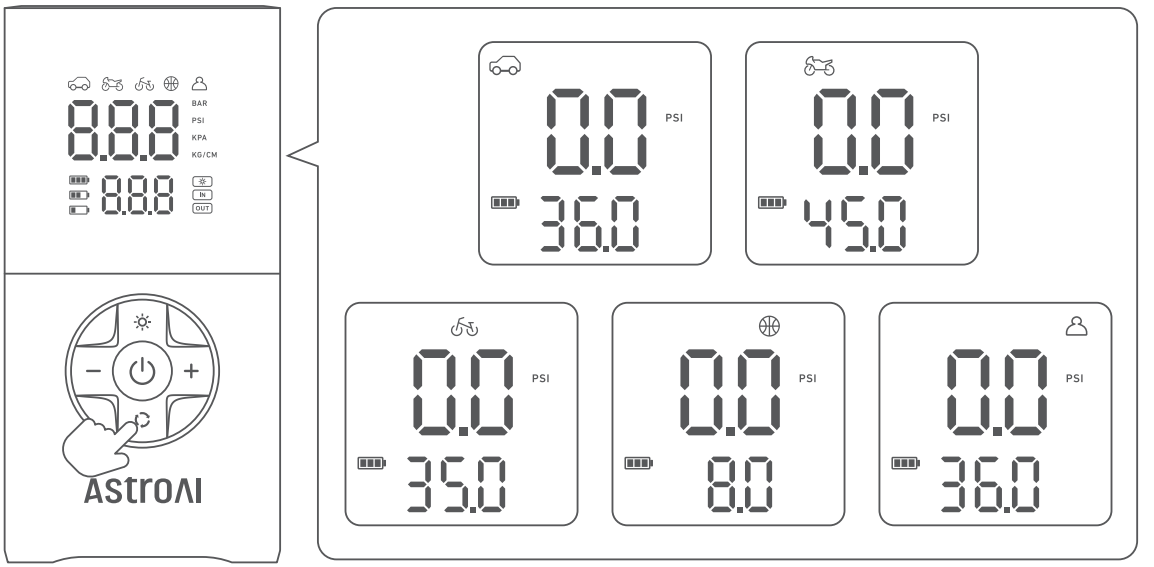

- Press and hold the Settings Button to switch units between PSI, Bar, kPa, and kg/cm^2.

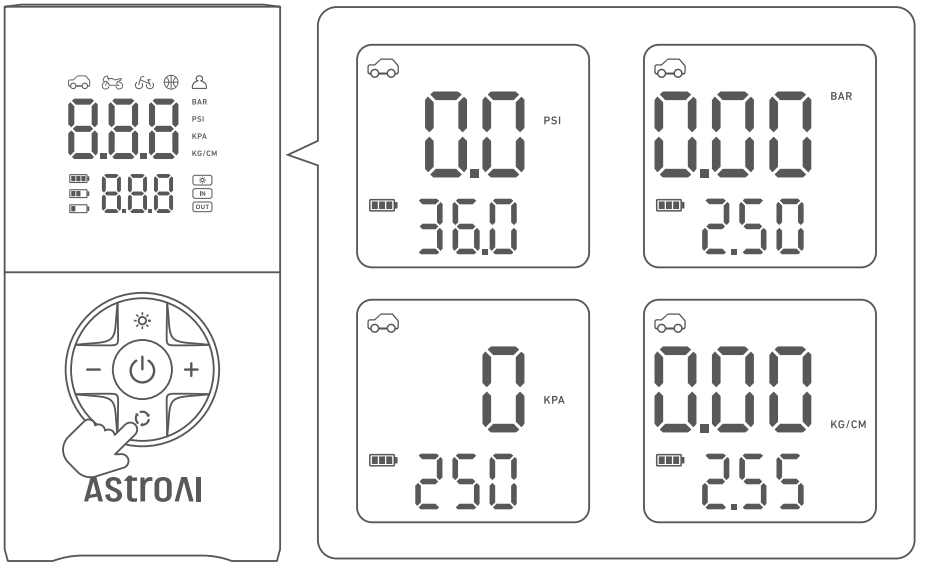

III. Preset the Pressure Value

Press the “+” and “-” Buttons to set the pressure value. Press and hold a button to rapidly change the pressure value. After choosing the desired value, the number will blink three times and be set.

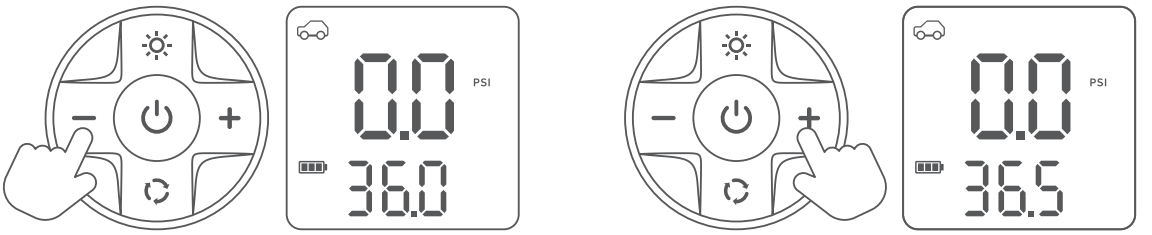

IV. Turn the LED Light On/Off

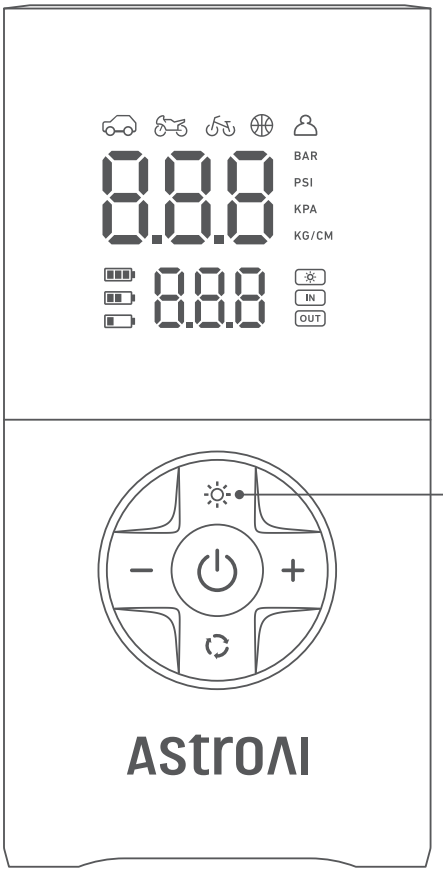

Press the LED Light Button once to turn the light on.

Press the LED Light Button for a second time to activate the slow flashing feature.

Press the LED Light Button for a third time to activate the quick flashing feature.

Press the LED Light Button for a fourth time to turn the light off.

V. Connect the Hose

- Screw the quick connector onto the quick connector port of the product.

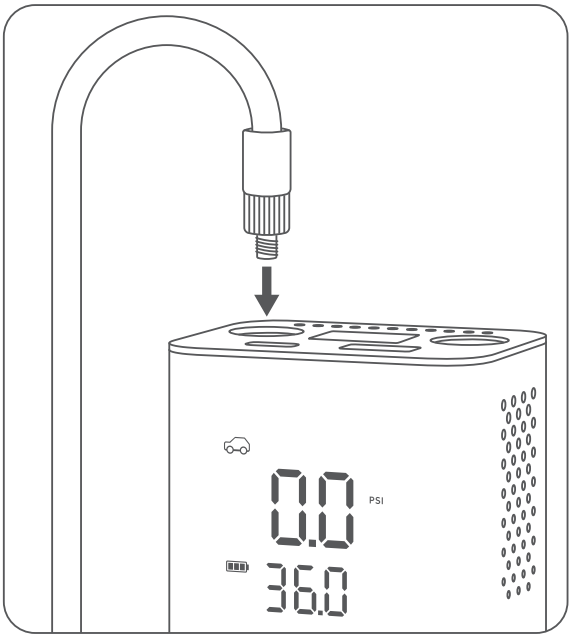

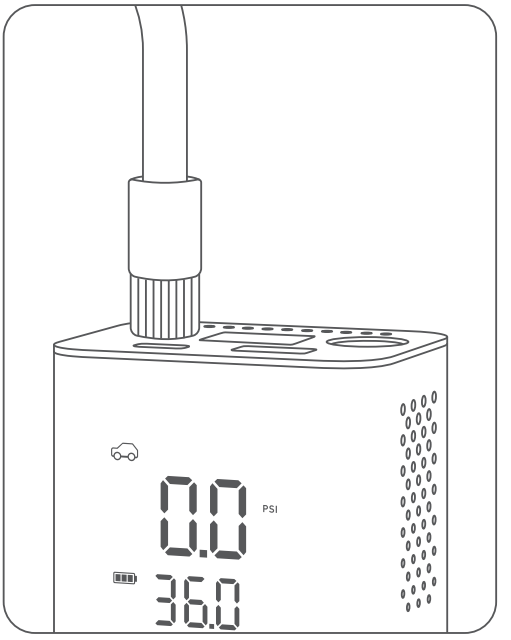

- Remove the valve cap from the tire valve stem and attach the quick connector to the valve stem.

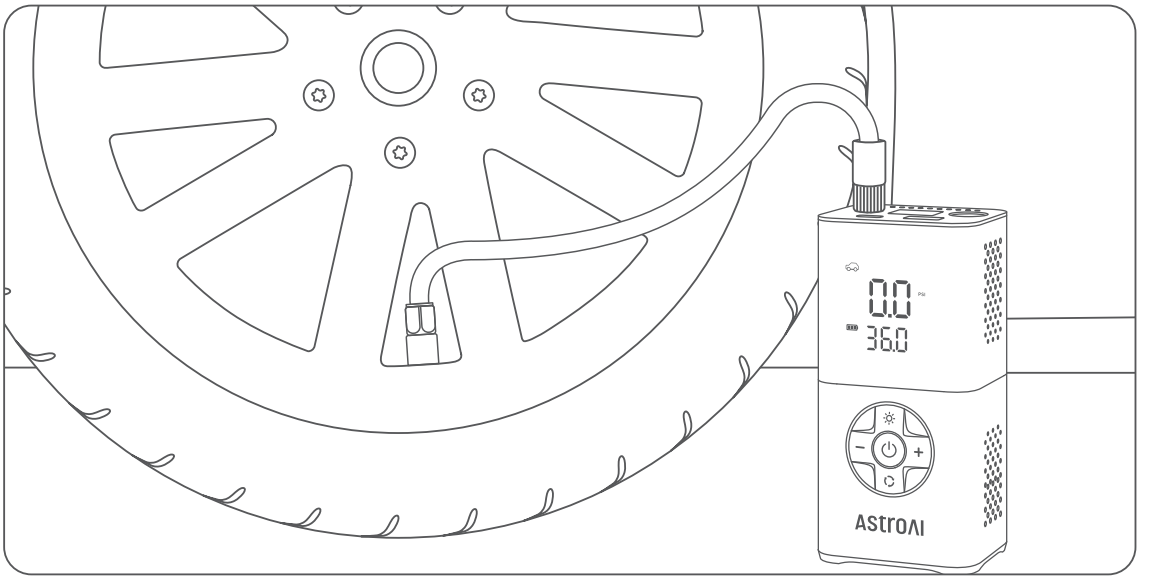

VI. Measure Pressure Value

When the quick connector is connected to the inflatables and powered on, the screen will display the inflatable's real-time pressure value.

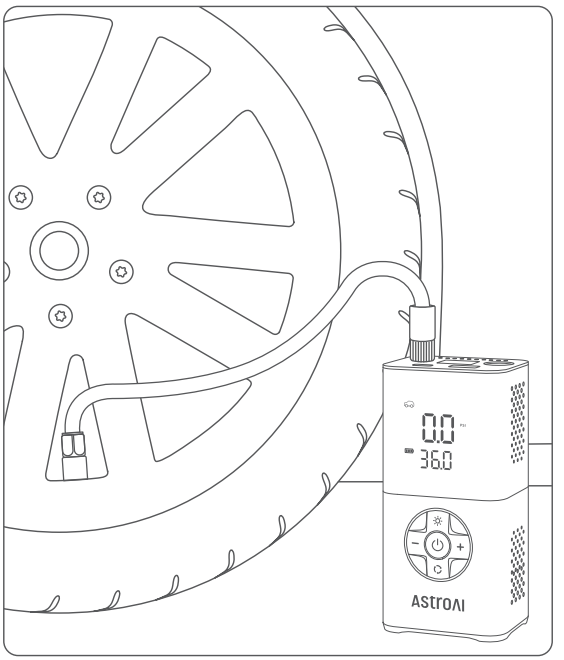

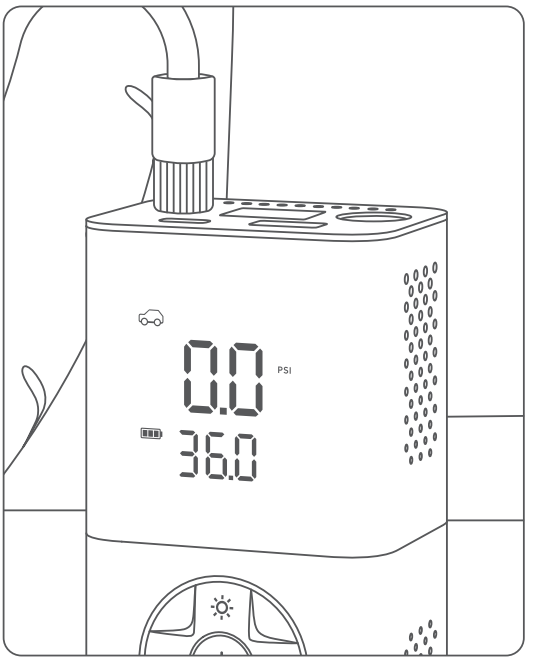

VII. Start Inflation

Press the Power Button to start inflating; the digital screen will display the tire's real-time pressure value. (Note: do not touch the hose during inflation.)

VIII. Stop Inflation

The air pump will automatically stop inflating when it reaches the preset pressure value. You can also press the Power Button to manually stop inflation.

IX. Complete Inflation

- When the inflation is completed, remove the quick connector from the tire's valve stem and attach the valve cap back to the tire's valve stem.
- When not in use, store the hose by screwing the quick connector onto the hose storage port.

X. Power Bank Function

The product's USB output port can be used to charge other electronic devices.

TROUBLESHOOTING/FAQ

- The air pump does not work: Please check the battery level of the product. The lithium battery may discharge when it is not in use.
- Slow inflation: Check if the quick connector is correctly connected to the tire's valve stem.
- The air pump will get hot after continuous use, please wait until it cools down before using it again.
- The lithium battery's capacity and life will worsen in low-temperature environments. This is a normal phenomenon of lithium products.

MAINTENANCE

- Store the product in a cool and dry place and avoid direct sunlight.
- Please charge the product to a battery level of 50% ~ 80% before long-term storage. Charge it every 3 months to prolong its battery life.
- Only use mild soap and a cloth dipped in hot water to clean the plastic parts.

SPECIFICATIONS

Model	AIRUN L7
Inflation Speed	17L/Min
Power	50W
Maximum Working Pressure	150PSI
Battery Capacity	2000mAh × 2
Input	5V⎓1A (Type-C)
Output	5V⎓1A (USB)
Inflation Modes	Cars, Motorcycles, Bicycles, Basketballs and Custom
Display Units	PSI, Bar, kPa, kg/cm^2
Functions	Inflation, Illumination, SOS, Power Bank
Inflation Hose Length	0.82ft (25cm)
USB Charging Cord Length	0.98ft (0.3m)
Dimensions	5.27 × 2.59 × 1.96in (13.4 × 6.6 × 5cm)

RECYCLING

You may dispose of the product when its service life has ended, please recycle the recyclable parts according to local guidelines.

WARRANTY PERIOD

2-Year Limited Warranty from AstroAI

Each AstroAI Portable Air Pump will be free from defects in material and workmanship. This warranty does not cover damage from neglect, misuse, contamination, alteration, accident, or abnormal conditions of operation or handling. This warranty covers the original purchaser only and is not transferable.

AstroAI always wants to provide our customers with excellent products and customer service.

Questions or concerns? We're happy to help! Please contact us via support@astroai.com.

AstroAI

Web: www.astroai.com

E-Mail: support@astroai.com

V1.1